# LDM-852A

# DIGITAL MULTIMETER

# SERVICE MANUAL

CONTENTS


| | Page |
|---|---|
| 1. Specifications | 2 |
| 2. Test Equipment Required | 4 |
| 3. Calibration Procedure | 5 |
| 4. Troubleshooting Procedure | 8 |
| 5. Location of Adjustment | 9 |
| 6. Printed Circuit Board | 10 |
| 7. Block Diagram | 11 |
| 8. Schematic Diagram | 13 |
| 9. Parts List | 16 |


**********

NOTE

These servicing instructions are for use by qualified personnel only. To avoid electrical shock, do not perform any servicing other than that contained in the service manual unless you are qualified to do so.

**********

## 1. Specifications

### DC Voltage

| Range | Accuracy | Resolution | Input Impedance | Max. Input Voltage |
|---|---|---|---|---|
| 0.2V | ±0.04% rdg ±2dgt | 0.01mV | Approx. 500 MΩ | 1100 V DC Peak |
| 2V | ±0.03% rdg ±2dgt | 0.1mV | | |
| 20V | ±0.04% rdg ±2dgt | 1mV | Approx. 10 MΩ | |
| 200V | ±0.04% rdg ±2dgt | 10mV | | |
| 1000V | ±0.04% rdg ±2dgt | 100mV | | |

### AC Voltage

| Range | Accuracy | Frequency | Resolution | Input Impedance | Max. Input Voltage |
|---|---|---|---|---|---|
| 0.2V | ±0.4%rdg±10dgt<br>±1.5%rdg±20dgt | 40Hz~1kHz<br>1kHz~5kHz | 0.01mV | Approx. 500 MΩ Input capacitance 100pF | AC 1100 V DC 1100 V |
| 2V | ±0.3%rdg±10dgt<br>±1.5%rdg±20dgt | 40Hz~1kHz<br>1kHz~5kHz | 0.1mV | | |
| 20V | ±0.4%rdg±10dgt<br>±2.5%rdg±20dgt | 40Hz~1kHz<br>1kHz~5kHz | 1mV | Approx. 10MΩ Input capacitance 100pF | |
| 200V | ±0.4%rdg±10dgt | 40Hz~1kHz | 10mV | | |
| 1000V | ±0.5%rdg±10dgt | 40Hz~500Hz | 100mV | | |

### Resistance (HI) (Open-circuit measuring voltage is less than 5.0V.)

| Range | Accuracy | Resolution | Measuring Current | Max. Input Voltage |
|---|---|---|---|---|
| 200Ω | ±0.04%rdg ±4dgt | 10mΩ | 1mA | 250 V AC/DC |
| 2kΩ | ±0.03%rdg ±4dgt | 100mΩ | 1mA | |
| 20kΩ | ±0.03%rdg ±4dgt | 1Ω | 100μA | |
| 200kΩ | ±0.03%rdg ±4dgt | 10Ω | 10μA | |
| 2000kΩ | ±0.2%rdg ±2dgt | 100Ω | 1μA | |
| 20MΩ | ±1%rdg ±2dgt | 1kΩ | 0.1μA | |

### Resistance (LO) (Open-circuit measuring voltage is less than 0.5V. In the 200Ω range, however, it is less than 5.0 V.)

| Range | Accuracy | Resolution | Measuring Current | Max. Input Voltage |
|---|---|---|---|---|
| 200Ω | ±0.15%rdg ±2dgt | 10mΩ | 1mA | 250 V AC/DC |
| 2kΩ | ±0.15%rdg ±2dgt | 100mΩ | 100μA | |
| 20kΩ | ±0.15%rdg ±2dgt | 1Ω | 10μA | |
| 200kΩ | ±0.15%rdg ±2dgt | 10Ω | 1μA | |
| 2000kΩ | ±0.5%rdg ±2dgt | 100Ω | 0.1μA | |
| 20MΩ | ±1.5%rdg ±2dgt | 1kΩ | 0.01μA | |

### DC Current

| Range | Accuracy | Resolution | Internal Resistance | Max. Input Current |
|---|---|---|---|---|
| 2mA | ±0.4%rdg ±2dgt | 10μA | 100Ω | 2A |
| 20mA | ±0.4%rdg ±2dgt | 100μA | 10Ω | |
| 200mA | ±0.8%rdg ±2dgt | 1mA | 1Ω | |
| 2000mA | ±0.8%rdg ±2dgt | 10mA | 0.1Ω | |

### AC Current

| Range | Accuracy | Frequency | Resolution | Internal Resistance | Max. Input Current |
|---|---|---|---|---|---|
| 2mA | ±0.6%rdg±10dgt | 40Hz~1kHz | 10μA | 100Ω | 2A |
| 20mA | ±0.6%rdg±10dgt | 40Hz~1kHz | 100μA | 10Ω | |
| 200mA | ±1%rdg±10dgt | 40Hz~1kHz | 1mA | 1Ω | |
| 2000mA | ±1%rdg±10dgt | 40Hz~1kHz | 10mA | 0.1Ω | |

### General Specifications

| | |
|---|---|
| Max. Display Digits | 19999 (4½ digits) |
| Display Element | Green LED (Character size of figures 14 mm) |
| Range Switching | Manual<br>DC/AC V ; 5 ranges<br>DC/AC A ; 4 ranges<br>OHMs ; 6 ranges |
| Overrange Indication | Display 0000 and flashing |
| Polarity | Automatic ("−" indicates negative polarity) |
| Sample Rate | 2.5 times per second |
| Continuity Check | |
| FUNCTION/RANGE | Ω HI/200 Ω and 2 kΩ |
| Electric Buzzer | Beep within 2 Ω ± 1 Ω |
| Open Terminal Voltage | Less than 5.0 V |
| ON-OFF Switch | On rear panel |
| Diode Check | |
| FUNCTION/RANGE | Ω HI/2 kΩ |
| Measuring Current | 1 mA |
| Measuring Voltage | 0 – 1.9999 mV |
| Accuracy | 0.5% rdg ± 2 dgt |
| Open Terminal Voltage | Less than 5.0 V |
| 0 Ω ADJ in measuring resistance | Manual, 200 Ω and 2 kΩ |
| Operating Temperature and Humidity | |
| Temperature | 0°C ~ 40°C |
| Humidity | Less than 80% RH<br>(When there is no dew) |
| Precision Temperature and Humidity | 23°C ± 5°C, less than 80%RH |
| Storage Temperature | −20°C ~ 60°C |
| Overcurrent Protector | Internal fuse |
| Withstand Voltage | AC 1.5 kV, 1 minute |
| GPIB Connector Bus | Option |
| Power Requirements | |
| Line Voltage | AC 100, 120, 230 V, 50/60 Hz |
| Power Consumption | 5 VA |
| Size | 211(W) x 80(H) x 265(D) mm |
| Weight | Approx. 2.2 kg |
| Accessories | Test leads 1<br>2A fuse 1 |

## 2. Test Equipment Required

The following test equipment is required for calibration and servicing of the Model LDM-852A. The suggested specifications are the minimum necessary for proper calibration of this instrument.

| Test Equipment | Minimum spec. |
|---|---|
| - Digital Multimeter | $4\frac{1}{2}$ digit |
| - Voltmeter Calibrator | DC 190mV to 1000V<br>Accuracy < ±0.01% |
| | AC 190mV to 1000V<br>Accuracy < ±0.05%<br>Frequency 400Hz - 5kHz (20V) |
| - Dacade Resistor | 1.9 kohm to 19 Mohm<br>Accuracy < ±0.25% |
| - Oscilloscope | 10mV sensitivity<br>20MHz bandwidth |
| - Resistor | 10 Mohm < ±10%<br>2 ohm < ±10% |
| - Capacitor | 0.02μF < ±20% |

## 3. Calibration Procedure

* Calibration should be performed after a 30 minute warm-up period. It should also be confirmed that the unit is connected to the rated power line voltage.

* All adjustment should be completed in the given order, because some adjustments interact with others.

* During the adjustment procedure, remove the case only when necessary and replace immediately after making an adjustment. This will maintain all circuit at constant operating temperature.

1) Power Supply

a) Connect the DC voltmeter between cathode of D12 and COM jack.

b) Adjust VR18 for a voltage reading of +8.00V.

2) Adjustment of DCV Function

a) Depress DCV button of FUNCTION switch.

b) Connect the voltmeter calibrator to V/Ω jack .

c) Adjust the following adjustment pots according to Table-1.

| RANGE | Input conditions | Adjustment | Display |
|---|---|---|---|
| 200mV | V/Ω short | VR7 | 00.00 ±0dgt |
| | V/Ω ○ ─┬─ 10MΩ ─┬─ 0.02μF ─ COM ○ | VR3 | 00.00 ±5dgt |
| 2V | 1.9000V | VR16 (Coarse) | 1.9000V ±10dgt |
| | 1.9000V | VR19 | Same absolute value |
| | -1.9000V | | |
| | 1.9000V | VR17 (Fine) | 1.9000 |
| 200mV | 190.00mV | VR8 | 190.00 |
| 20V | 19.000V | VR1 | 19.000 |
| 1000V | 1000.0V | VR2 | 1000.0 |

Table-1

3) Adjustment of ACV Function

a) Depress ACV button of FUNCTION switch.

b) Connect the voltmeter calibrator to V/Ω jack.

c) Adjust the following adjustment pots according to Table-2.

| RANGE | Input voltage | Adjustment | Display |
|---|---|---|---|
| 2V | 1.9000V (400Hz) | VR5 | 1.9000 |
| 200mV | 190.00mV (400Hz) | VR4 | 190.00 |
| 20V | 19.000V (5kHz) | C1 | 19.000 ±30dgt |

Table-2

4) Adjustment of OHM Function

a) 0 Adjustment

- Set: FUNCTION ΩHI
  RANGE 200Ω

- Connect the short piece of wire between V/Ω and COM jack.

- Adjust 0Ω ADJ, on the front panel, for a display of 00.00.

b) Full Scale Adjustment

- Adjust the following adjustment pots, on each range, according to Table-3.

| FUNCTION | RANGE | Standard resistor | Adjustment | Display |
|---|---|---|---|---|
| ΩHI | 20k | 19.000kΩ | VR13 | 19.000 |
| ΩLO | | | VR14 | |
| ΩHI | 2k | 1.9000kΩ | VR9 | 1.9000 |
| | 200k | 190.00kΩ | VR10 | 190.00 |
| | 2000k | 1900.0kΩ | VR11 | 1900.0 |
| | 20M | 19.000MΩ | VR12 | 19.000 |

Table-3

5. Buzzer

a) Set:

| | |
|---|---|
| FUNCTION | OHI |
| RANGE | 200Ω |
| BUZZER (rear panel) | ON |

b) Short between V/Ω and COM jack with short piece of wire.

c) Adjust 0Ω ADJ, on the front panel, for a display of 00.00.

d) Remove the wire, then connect the 2Ω resistor to V/Ω and COM jack.

e) Adjust VR6 for a buzzer just makes sound.

4. Troubleshooting Procedure

1) Check all control settings, because an incorrect setting can make a good unit appear defective.

2) Some trouble can be solved with proper adjustment.

3) Check the DC voltage as shown on the schematic diagram to locate the defective circuit. Start with the power supply.

4) Check all circuit for visual defects such as broken components, loose connections and poor soldering which could be a cause of trouble.

5) Troubleshooting Chart

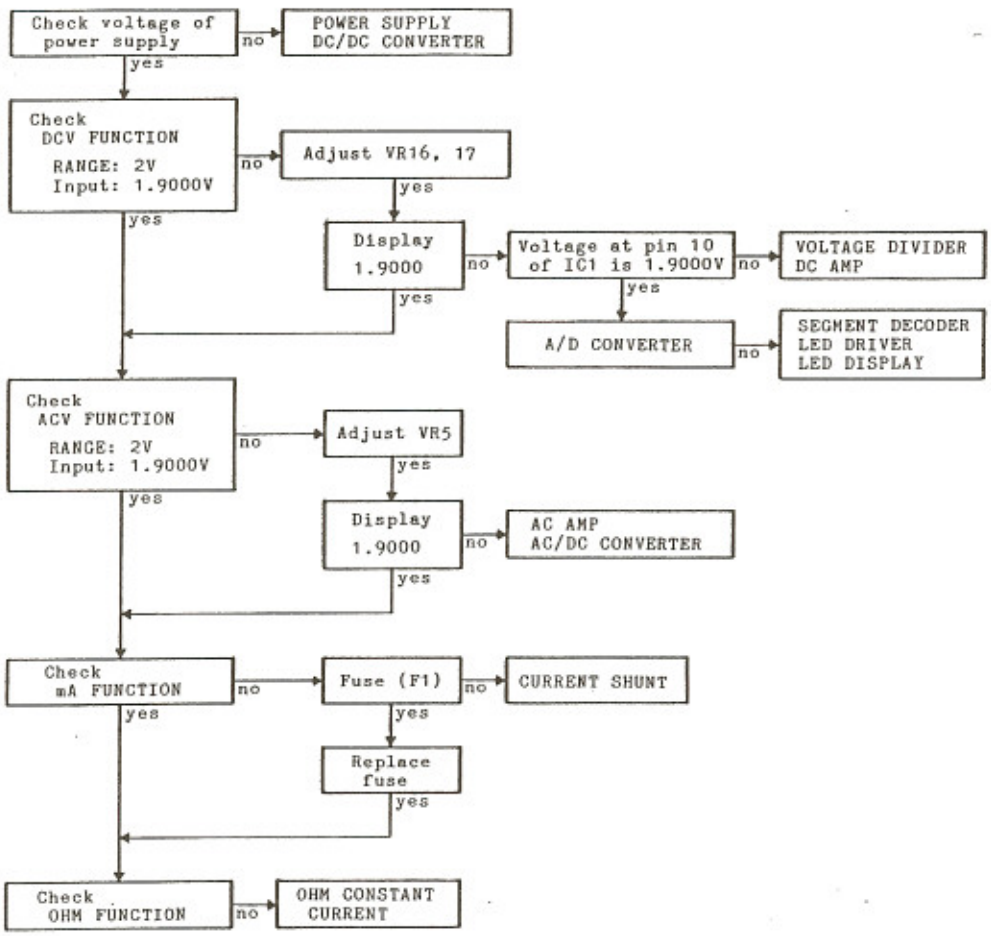

5. Location of Adjustment

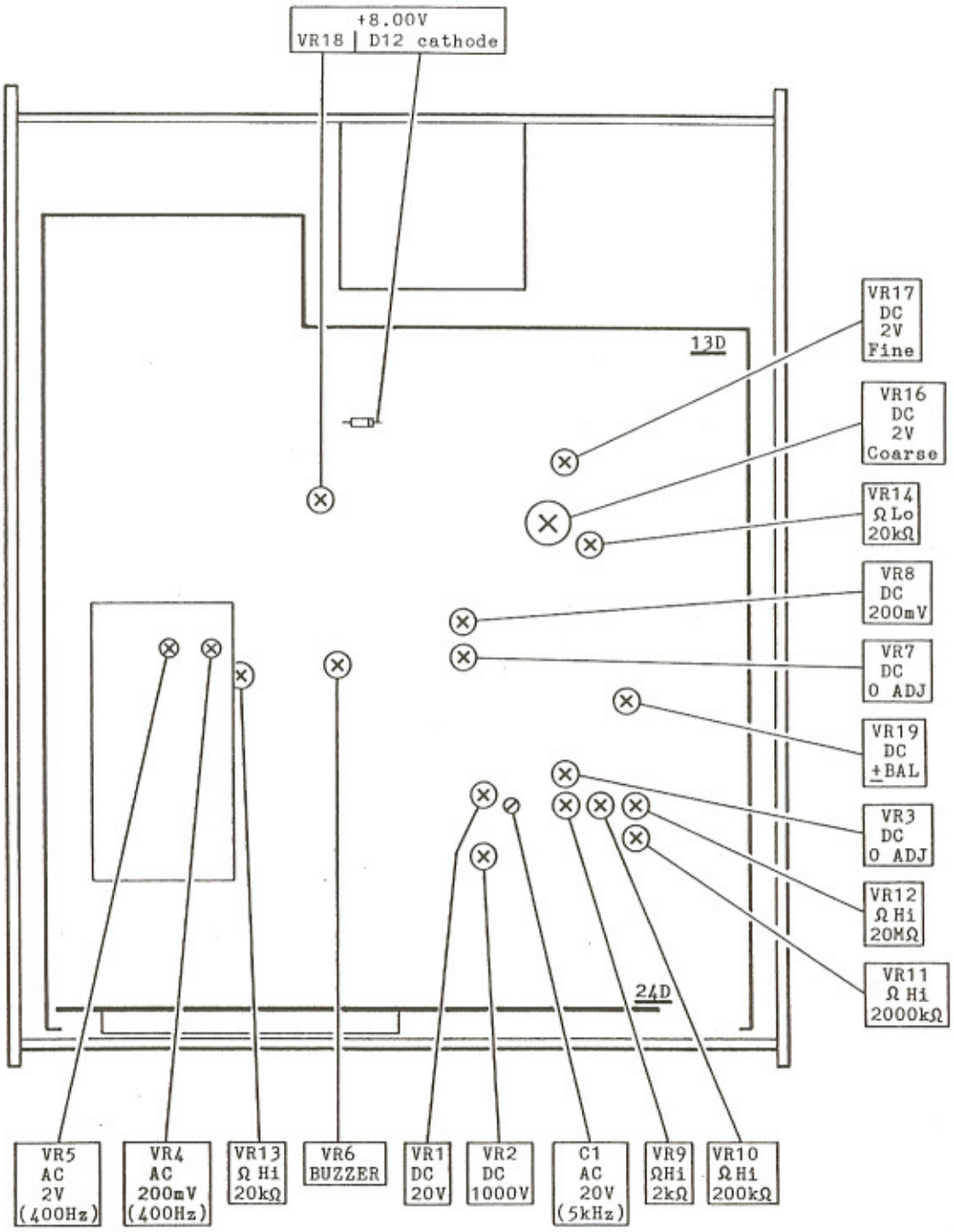

6. Printed Circuit Board

24D

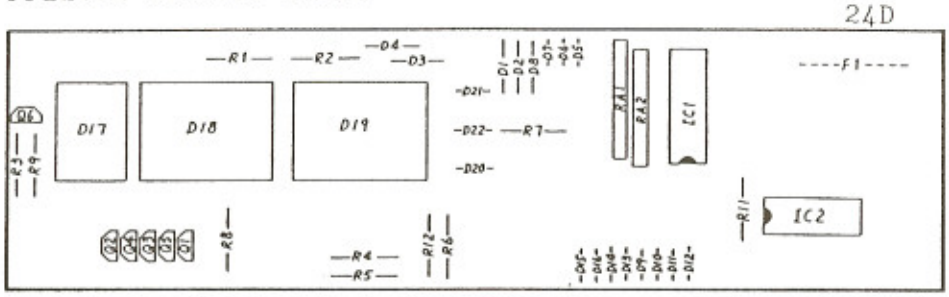


13D

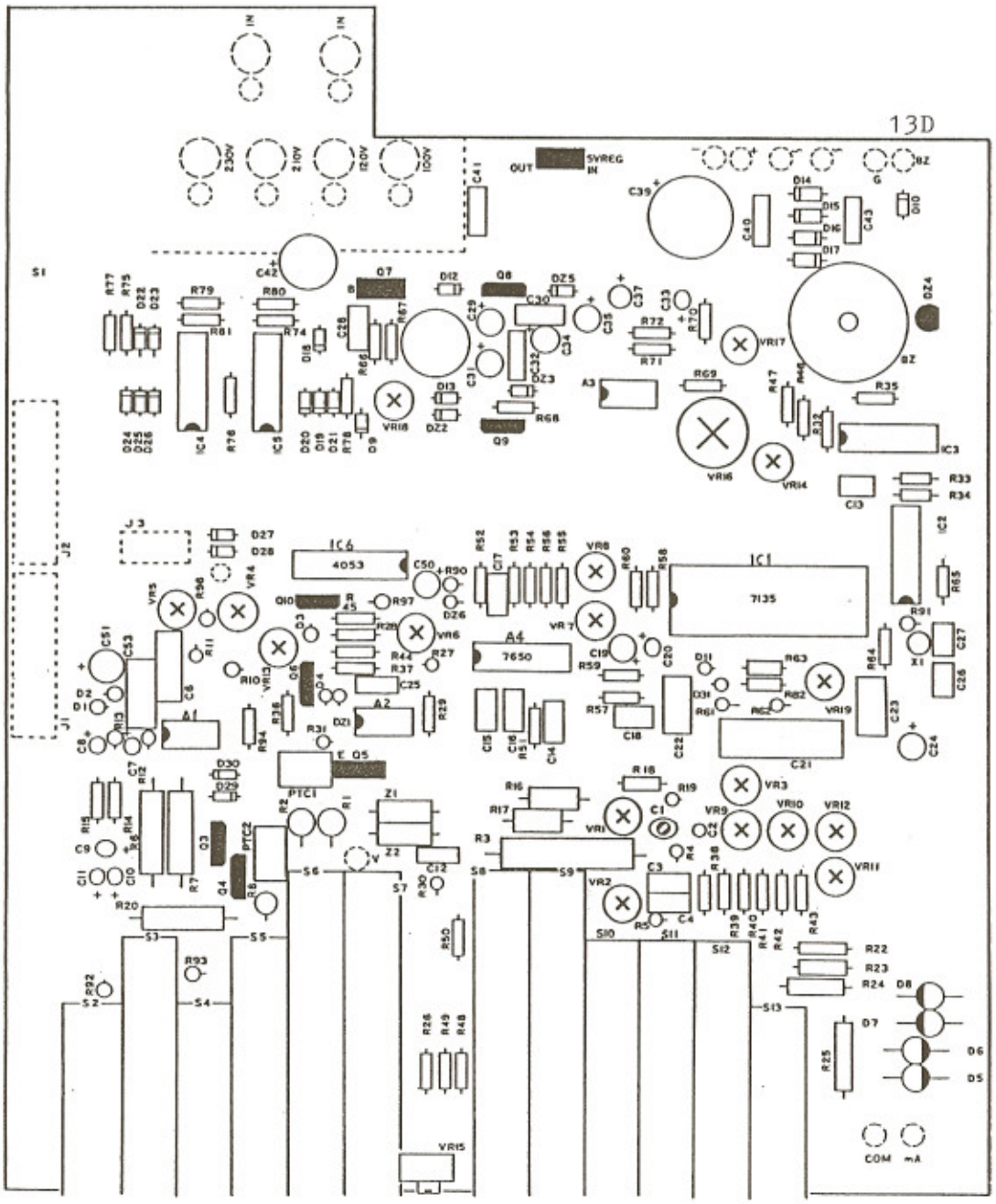

## 7. Block Diagram

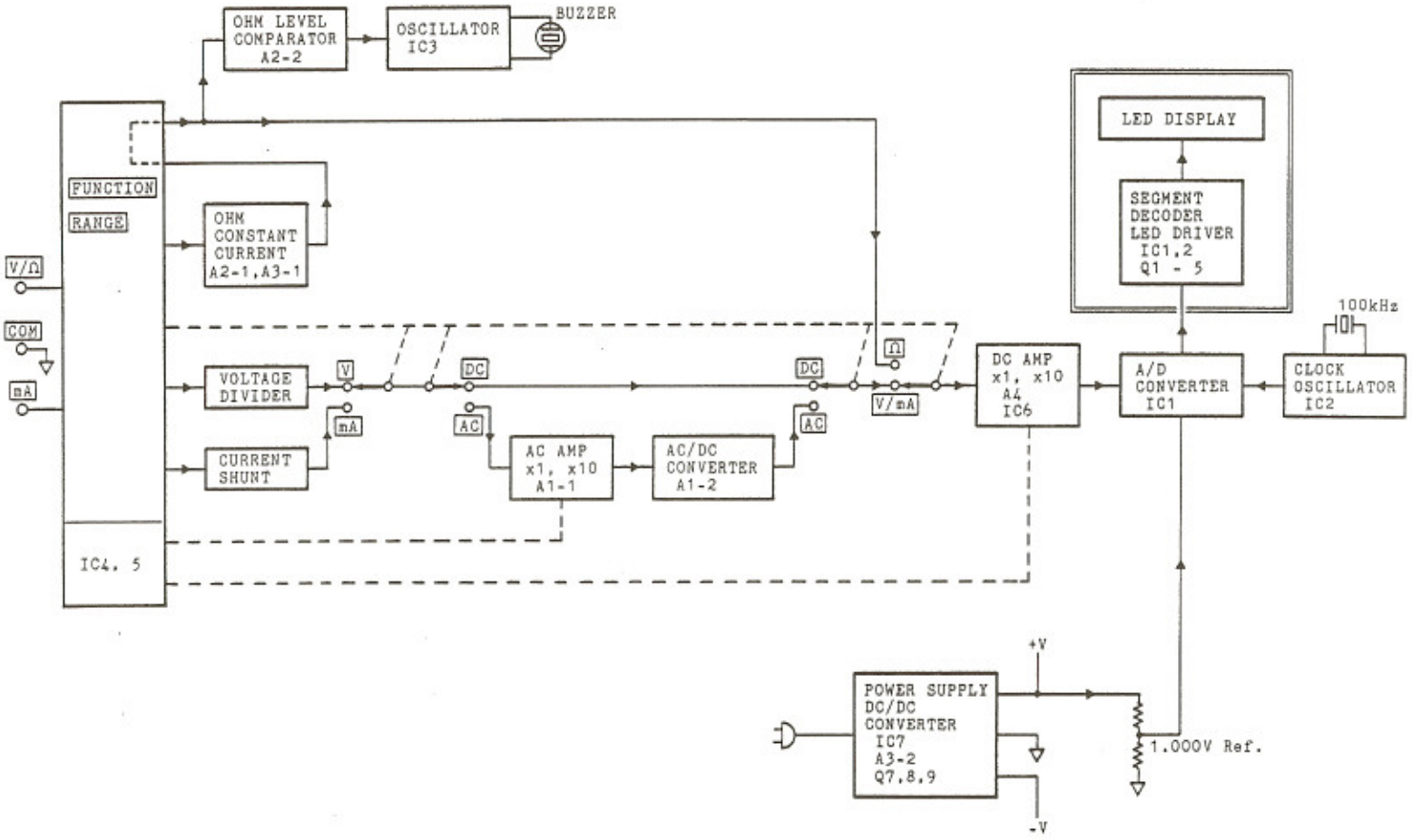

8. Schematic Diagram

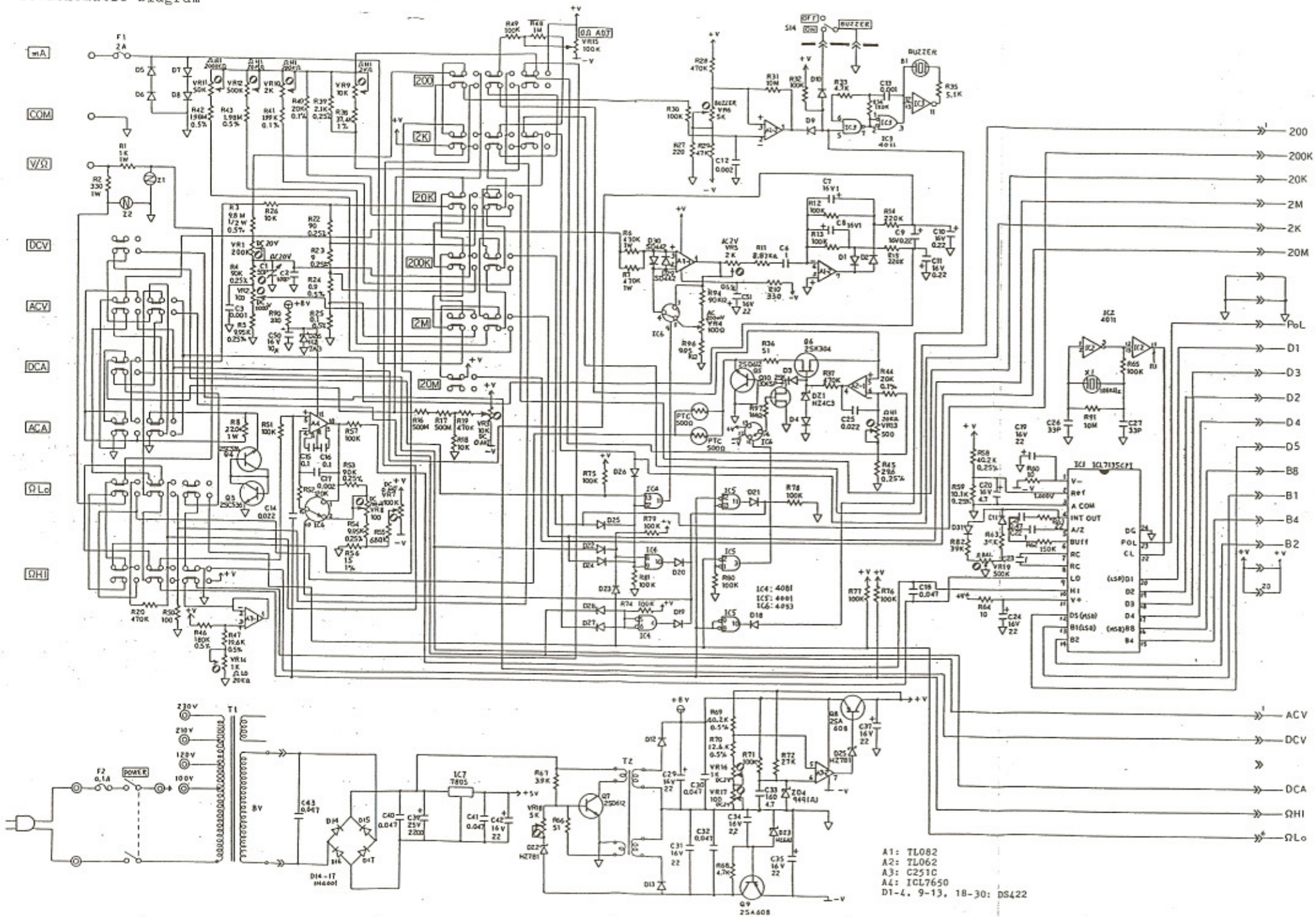

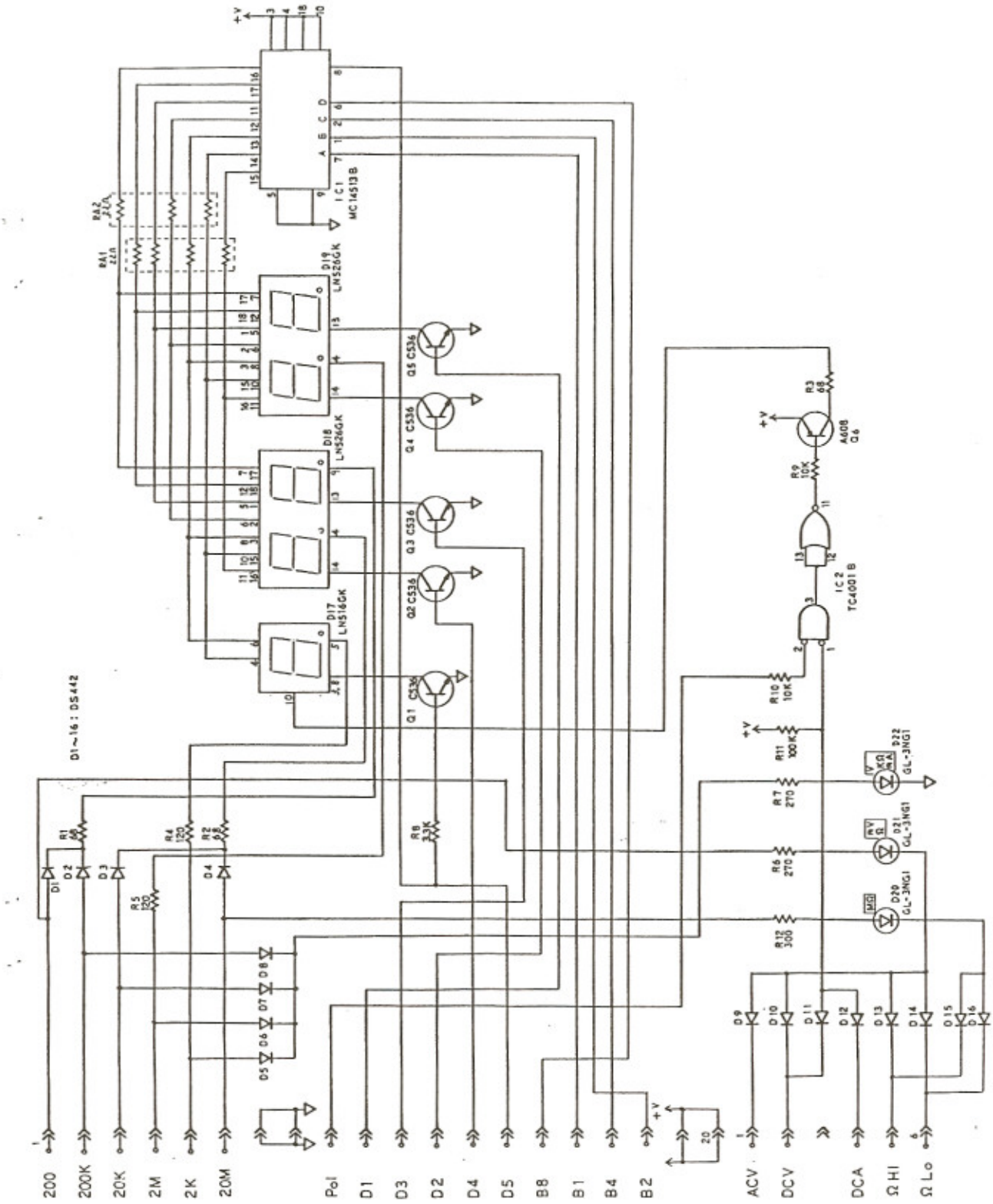
D1~16 : DS442
IC1 MC14513B
D19 LN526GK
D18 LN526GK
D17 LN516GK
Q1 C536
Q2 C536
Q3 C536
Q4 C536
Q5 C536
IC2 TC4001B
Q6 A608
D22 GL-3NG1
D21 GL-3NG1
D20 GL-3NG1
200
200K
20K
2M
2K
20M
Pol
D1
D3
D2
D4
D5
B8
B1
B4
B2
ACV
DCV
DCA
Ω HI
Ω Lo

## 9. Parts List

### MAIN BOARD

| No. | DESCRIPTION | | | |
|---|---|---|---|---|
| | < RESISTORS > | | | |
| R1 | Solid | 1W | 1kΩ | 5% |
| R2 | Solid | 1W | 330Ω | 5% |
| R3 | Metal glaze | 1/2W | 9.8MΩ | 0.5% |
| R4 | Metal film | 1/4W | 90kΩ | 0.25% |
| R5 | Metal film | 1/4W | 9.95kΩ | 0.25% |
| R6 | Metal film | 1W | 470kΩ | 5% |
| R7 | Metal film | 1W | 470kΩ | 5% |
| R8 | Metal film | 1/2W | 470kΩ | 5% |
| R9 | --- | | | |
| R10 | Metal film | 1/4W | 330Ω | 0.5% |
| R11 | Metal film | 1/4W | 88.7kΩ | 0.5% |
| R12 | Metal film | 1/4W | 100kΩ | 0.5% |
| R13 | Metal film | 1/4W | 100kΩ | 0.5% |
| R14 | Carbon film | 1/4W | 220kΩ | 5% |
| R15 | Carbon film | 1/4W | 220kΩ | 5% |
| R16 | Metal glaze | 1/4W | 500MΩ | 10% |
| R17 | Metal glaze | 1/4W | 500MΩ | 10% |
| R18 | Carbon film | 1/4W | 10kΩ | 5% |
| R19 | Carbon film | 1/4W | 470kΩ | 5% |
| R20 | Metal film | 1/4W | 470kΩ | 5% |
| R21 | --- | | | |
| R22 | Metal film | 1/4W | 90Ω | 0.25% |
| R23 | Metal film | 1/4W | 9Ω | 0.25% |
| R24 | Metal film | 1/4W | 0.9Ω | 0.5% |
| R25 | Wire wound | 1/4W | 0.1Ω | 0.5% |
| R26 | Carbon film | 1/4W | 10kΩ | 5% |
| R27 | Carbon film | 1/4W | 220Ω | 5% |
| R28 | Carbon film | 1/4W | 470kΩ | 5% |
| R29 | Carbon film | 1/4W | 47kΩ | 5% |
| R30 | Carbon film | 1/4W | 100kΩ | 5% |
| R31 | Carbon film | 1/4W | 10MΩ | 5% |
| R32 | Carbon film | 1/4W | 100kΩ | 5% |
| R33 | Carbon film | 1/4W | 4.7kΩ | 5% |
| R34 | Carbon film | 1/4W | 150kΩ | 5% |
| R35 | Carbon film | 1/4W | 5.1kΩ | 5% |
| R36 | Carbon film | 1/4W | 51Ω | 5% |
| R37 | Carbon film | 1/4W | 470kΩ | 5% |
| R38 | Metal film | 1/4W | 37.4kΩ | 1% |
| R39 | Metal film | 1/4W | 2.1kΩ | 0.25% |
| R40 | Metal film | 1/4W | 20kΩ | 0.1% |
| R41 | Metal film | 1/4W | 199kΩ | 0.25% |
| R42 | Metal glaze | 1/4W | 1.98MΩ | 0.5% |
| R43 | Metal glaze | 1/4W | 1.98MΩ | 0.5% |
| R44 | Metal film | 1/4W | 20kΩ | 0.1% |
| R45 | Metal film | 1/4W | 29.6kΩ | 0.25% |
| R46 | Metal film | 1/4W | 180kΩ | 0.5% |
| R47 | Metal film | 1/4W | 19.6kΩ | 0.5% |
| R48 | Carbon film | 1/4W | 1MΩ | 5% |
| R49 | Carbon film | 1/4W | 100kΩ | 5% |
| R50 | Carbon film | 1/4W | 100Ω | 5% |

| No. | DESCRIPTION | | | |
|---|---|---|---|---|
| R51 | Carbon film | 1/4W | 100kΩ | 5% |
| R52 | Carbon film | 1/4W | 120kΩ | 5% |
| R53 | Metal film | 1/4W | 90kΩ | 0.25% |
| R54 | Metal film | 1/4W | 9.95kΩ | 0.25% |
| R55 | Metal glaze | 1/4W | 680kΩ | 1% |
| R56 | Metal film | 1/4W | 15Ω | 1% |
| R57 | Carbon film | 1/4W | 100kΩ | 5% |
| R58 | Metal film | 1/4W | 40.2Ω | 0.25% |
| R59 | Metal film | 1/4W | 10.1kΩ | 0.25% |
| R60 | Carbon film | 1/4W | 10Ω | 5% |
| R61 | Carbon film | 1/4W | 22Ω | 5% |
| R62 | Carbon film | 1/4W | 150kΩ | 5% |
| R63 | Carbon film | 1/4W | 39kΩ | 5% |
| R64 | Carbon film | 1/4W | 10Ω | 5% |
| R65 | Carbon film | 1/4W | 100kΩ | 5% |
| R66 | Carbon film | 1/4W | 51Ω | 5% |
| R67 | Carbon film | 1/4W | 3.9kΩ | 5% |
| R68 | Carbon film | 1/4W | 4.7kΩ | 5% |
| R69 | Metal film | 1/4W | 40.2kΩ | 0.5% |
| R70 | Metal film | 1/4W | 12.6kΩ | 0.5% |
| R71 | Carbon film | 1/4W | 100kΩ | 5% |
| R72 | Carbon film | 1/4W | 27kΩ | 5% |
| R73 | Carbon film | 1/4W | 10kΩ | 5% |
| R74 | Carbon film | 1/4W | 100kΩ | 5% |
| R75 | Carbon film | 1/4W | 100kΩ | 5% |
| R76 | Carbon film | 1/4W | 100kΩ | 5% |
| R77 | Carbon film | 1/4W | 100kΩ | 5% |
| R78 | Carbon film | 1/4W | 100kΩ | 5% |
| R79 | Carbon film | 1/4W | 100kΩ | 5% |
| R80 | Carbon film | 1/4W | 100kΩ | 5% |
| R81 | Carbon film | 1/4W | 100kΩ | 5% |
| R82 | Carbon film | 1/4W | 39kΩ | 5% |
| R83 | --- | | | |
| R84 | --- | | | |
| R85 | --- | | | |
| R86 | --- | | | |
| R87 | --- | | | |
| R88 | --- | | | |
| R89 | --- | | | |
| R90 | Carbon film | 1/4W | 220Ω | 5% |
| R91 | Carbon film | 1/4W | 10MΩ | 5% |
| R92 | Carbon film | 1/4W | 10Ω | 5% |
| R93 | Carbon film | 1/4W | 1.5MΩ | 5% |
| R94 | Carbon film | 1/4W | 90kΩ | 5% |
| R95 | --- | | | |
| R96 | Carbon film | 1/4W | 9.95kΩ | 0.5% |
| R97 | Carbon film | 1/4W | 1MΩ | 5% |
| PTC1 | Carbon film | 1/4W | 500Ω | 20% |
| PTC2 | Carbon film | 1/4W | 500Ω | 20% |

| No. | DESCRIPTION | | | |
|---|---|---|---|---|
| | < VARIABLE RESISTORS > | | | |
| VR1 | Metal glaze | 1/8W | 220kΩ | 20% |
| VR2 | Metal glaze | 1/8W | 100Ω | 20% |
| VR3 | Carbon film | 1/8W | 10kΩ | 20% |
| VR4 | Carbon film | 1/8W | 100Ω | 20% |
| VR5 | Carbon film | 1/8W | 2kΩ | 20% |
| VR6 | Carbon film | 1/8W | 5kΩ | 20% |
| VR7 | Carbon film | 1/8W | 100kΩ | 20% |
| VR8 | Carbon film | 1/8W | 100Ω | 20% |
| VR9 | Carbon film | 1/8W | 10kΩ | 20% |
| VR10 | Carbon film | 1/8W | 2kΩ | 20% |
| VR11 | Carbon film | 1/8W | 50kΩ | 20% |
| VR12 | Carbon film | 1/8W | 500kΩ | 20% |
| VR13 | Metal film | 1/8W | 500Ω | 20% |
| VR14 | Metal film | 1/8W | 1kΩ | 20% |
| VR15 | Metal film | 1/8W | 100kΩ | 20% |
| VR16 | Carbon film | 1/8W | 1kΩ | 20% |
| VR17 | Metal film | 1/8W | 100Ω | 20% |
| VR18 | Carbon film | 1/8W | 5kΩ | 20% |
| VR19 | Carbon film | 1/8W | 500kΩ | 20% |
| | < CAPACITORS > | | | |
| C1 | Variable capacitor (Cer) | | 9-50 pF | |
| C2 | Ceramic | 50V | 100 pF | 10% |
| C3 | Plastic film | 50V | 0.001μF | 10% |
| C4 | Ceramic | 50V | 470 pF | 10% |
| C5 | --- | | | |
| C6 | Plastic film | 100V | 0.47μF | 10% |
| C7 | Tantalum | 16V | 1μF | 20% |
| C8 | Tantalum | 16V | 1μF | 20% |
| C9 | Tantalum | 16V | 0.22μF | 20% |
| C10 | Tantalum | 16V | 0.22μF | 20% |
| C11 | Tantalum | 16V | 0.22μF | 20% |
| C12 | Plastic film | 50V | 0.002μF | 10% |
| C13 | Plastic film | 50V | 0.001μF | 10% |
| C14 | Plastic film | 50V | 0.022μF | 10% |
| C15 | Plastic film | 50V | 0.1μF | 10% |
| C16 | Plastic film | 50V | 0.1μF | 10% |
| C17 | Plastic film | 50V | 0.002μF | 10% |
| C18 | Plastic film | 50V | 0.047μF | 10% |
| C19 | Electrolytic | 16V | 22μF | 20% |
| C20 | Tantalum | 16V | 4.7μF | 20% |
| C21 | Plastic film | 200V | 0.47μF | 10% |
| C22 | Plastic film | 50V | 1μF | 10% |
| C23 | Plastic film | 50V | 1μF | 10% |
| C24 | Electrolytic | 16V | 22μF | 20% |
| C25 | Plastic film | 50V | 0.022μF | 10% |
| C26 | Ceramic | 50V | 33 pF | 10% |
| C27 | Ceramic | 50V | 33 pF | 10% |
| C28 | Plastic film | 50V | 0.002μF | 10% |

| No. | DESCRIPTION | | | |
|---|---|---|---|---|
| C29 | Electrolytic | 16V | 22μF | 20% |
| C30 | Ceramic | 50V | 0.047μF | 10% |
| C31 | Electrolytic | 16V | 22μF | 20% |
| C32 | Ceramic | 50V | 0.047μF | 10% |
| C33 | Tantalum | 16V | 4.7μF | 20% |
| C34 | Electrolytic | 16V | 2.2μF | 20% |
| C35 | Electrolytic | 16V | 22μF | 20% |
| C36 | --- | | | |
| C37 | Electrolytic | 16V | 22μF | 20% |
| C38 | --- | | | |
| C39 | Electrolytic | 25V | 2200μF | 20% |
| C40 | Ceramic | 50V | 0.047μF | 10% |
| C41 | Ceramic | 50V | 0.047μF | 10% |
| C42 | Electrolytic | 16V | 22μF | 20% |
| C43 | Ceramic | 50V | 0.047μF | 10% |
| C44 | --- | | | |
| C45 | --- | | | |
| C46 | --- | | | |
| C47 | --- | | | |
| C48 | --- | | | |
| C49 | --- | | | |
| C50 | Electrolytic | 16V | 22μF | 20% |
| C51 | Electrolytic | 16V | 22μF | 20% |
| | < DIODES > | | | |
| D1 | Bias comp. | DS442 | Io=30mA | |
| D2 | Bias comp. | DS442 | Io=30mA | |
| D3 | Bias comp. | DS442 | Io=30mA | |
| D4 | Bias comp. | DS442 | Io=30mA | |
| D5 | Det. | U05B | 500V | |
| D6 | Det. | U05B | 500V | |
| D7 | Det. | U05B | 500V | |
| D8 | Det. | U05B | 500V | |
| D9 | Bias comp. | DS442 | Io=30mA | |
| D10 | Bias comp. | DS442 | Io=30mA | |
| D11 | Bias comp. | DS442 | Io=30mA | |
| D12 | Bias comp. | DS442 | Io=30mA | |
| D13 | Bias comp. | DS442 | Io=30mA | |
| D14 | Det. | U05B | 500V | |
| D15 | Det. | U05B | 500V | |
| D16 | Det. | U05B | 500V | |
| D17 | Det. | U05B | 500V | |
| D18 | Bias comp. | DS442 | Io=30mA | |
| D19 | Bias comp. | DS442 | Io=30mA | |
| D20 | Bias comp. | DS442 | Io=30mA | |
| D21 | Bias comp. | DS442 | Io=30mA | |
| D22 | Bias comp. | DS442 | Io=30mA | |
| D23 | Bias comp. | DS442 | Io=30mA | |